SelectBlinds®

Thank You For Your Purchase

Now that you have made the decision to beautify your space with timeless shutters, these step by step instructions will guide you through the easy installation process.



ANATOMY OF SHUTTERS

❶ Frame
(Top, Left, Right, Bottom)
❷ Top Rail
❸ Stile
❹ Louver
❺ Tilt Rod
❻ Divider Rail
(bigger shutter only)
❼ Bottom Rail

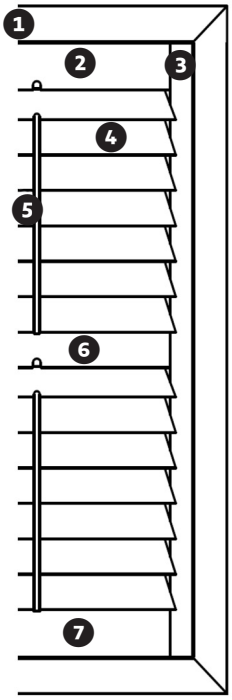

BEFORE YOU BEGIN INSPECT YOUR PACKAGE CAREFULLY

Call 1-800-737-4569 for questions about your package.

Tools Needed
1. Hand Drill
2. For Shutters over 60” tall &/or wide counter sink Drill Bit Set #8



What’s in your Package

1) Shutter Panels
(with premounted hinges pre-attached and magnets)





2) Shutter Frames
(with premounted hinges, corner joints & magnets)





3) All Mounting Hardware included:
a) Medium screws - to connect shutter frames.
b) Large screws - to mount the shutter frame to the wall opening.
c) Pins - to connect the hinges together of the shutter panel to the frame.



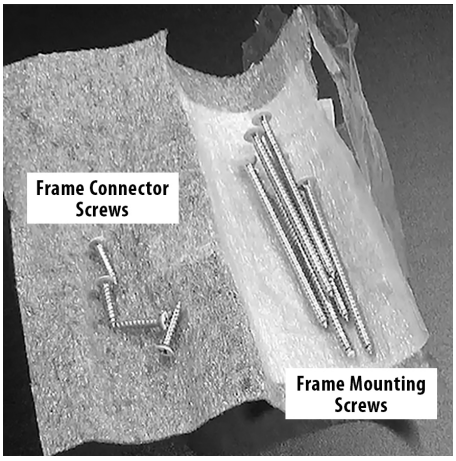

ASSEMBLY INSTRUCTIONS 1 of 3



1. Remove shutters from packaging
and be sure to locate your hardware bag on the outside before disposing packaging.

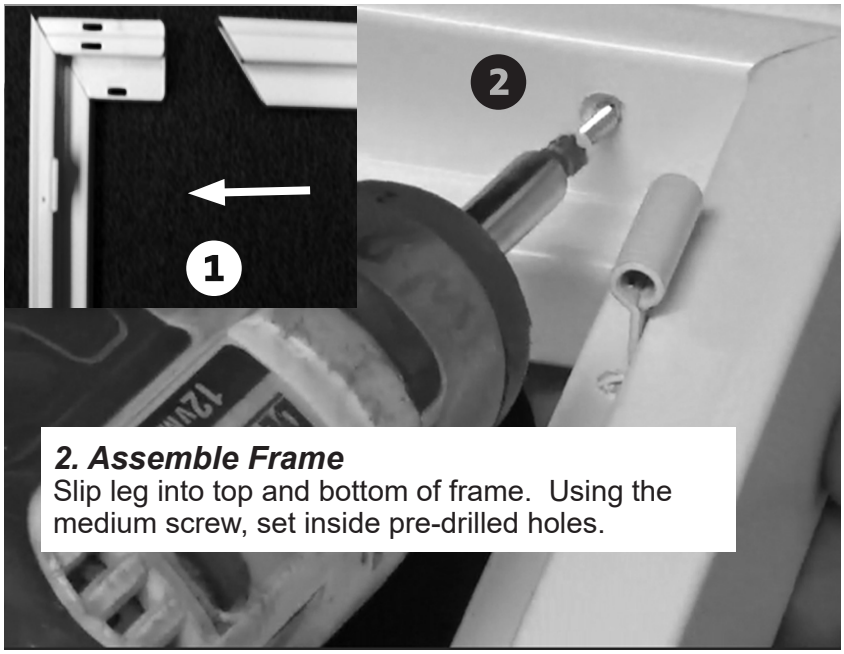

2. Assemble Frame
Slip leg into top and bottom of frame. Using the medium screw, set inside pre-drilled holes.

3. Mount Pre-Drilled Frame
Before Mounting, check which type of frame you will install to the wall.
NOTE: Fill any gaps between the frame, wall and/or window sill with window caulking (optional).

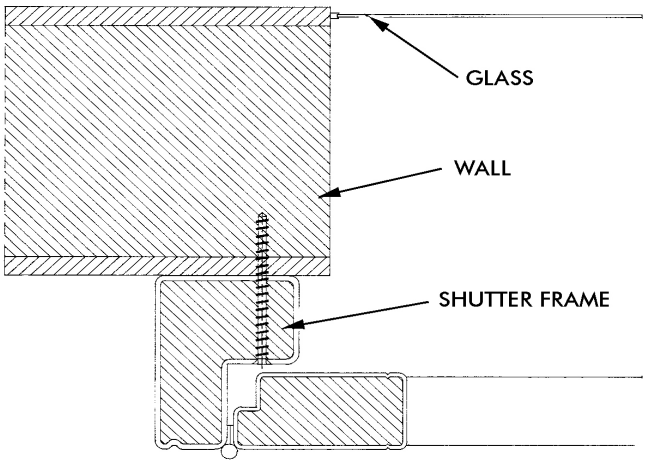

OUTSIDE FRAME MOUNT

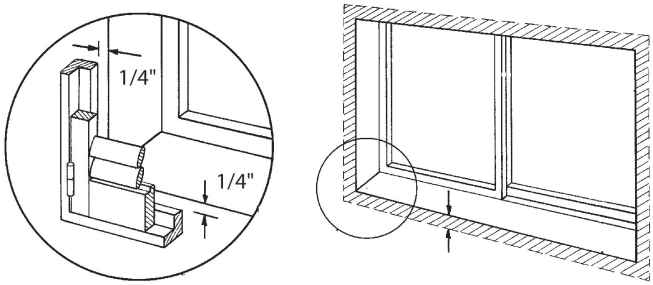

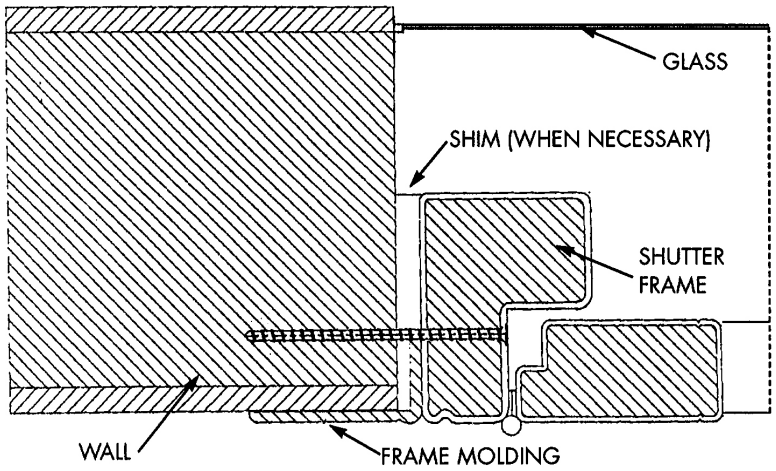

INSIDE FRAME MOUNT

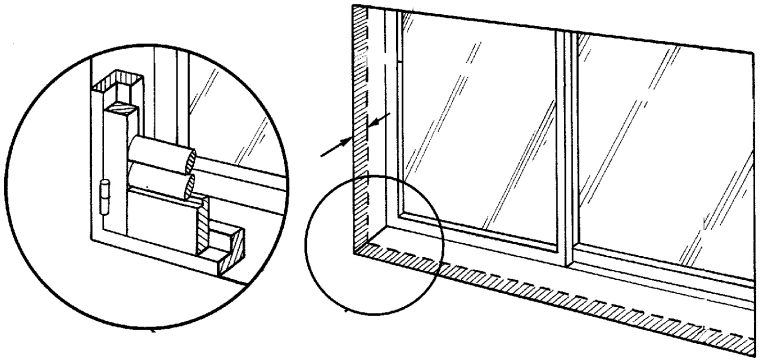

ASSEMBLY INSTRUCTIONS 2 of 3

3. Mount Pre-Drilled Frame

Using the pre-drilled holes as your guide, set frame in window opening using the large screws. Set the top screws on both sides by drilling all the way in, then drill the screw back out & set back in. Do Not over tighten or distort frame. Set remaining screws after you rack the shutter.



Note: For panels taller or wider than 60”, drill an additional screw hole in the center of the existing holes, using a drill bit #8.



Use frame mounting screw top and bottom center.

ASSEMBLY INSTRUCTIONS 3 of 3

4. Reattach the pre-hinged panels to the edge of the frame.

Place the Pre-hinged panel in the frame by matching up the hinges.
Now Drop in pins to secure each hinge.

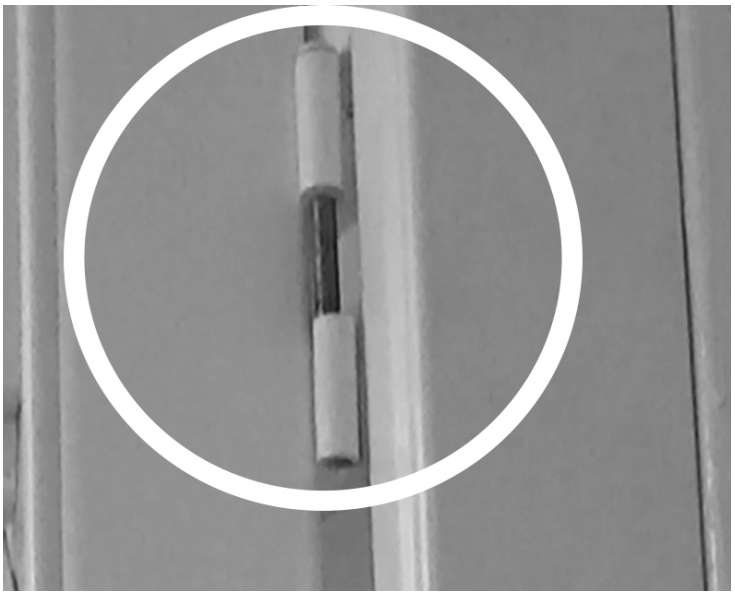

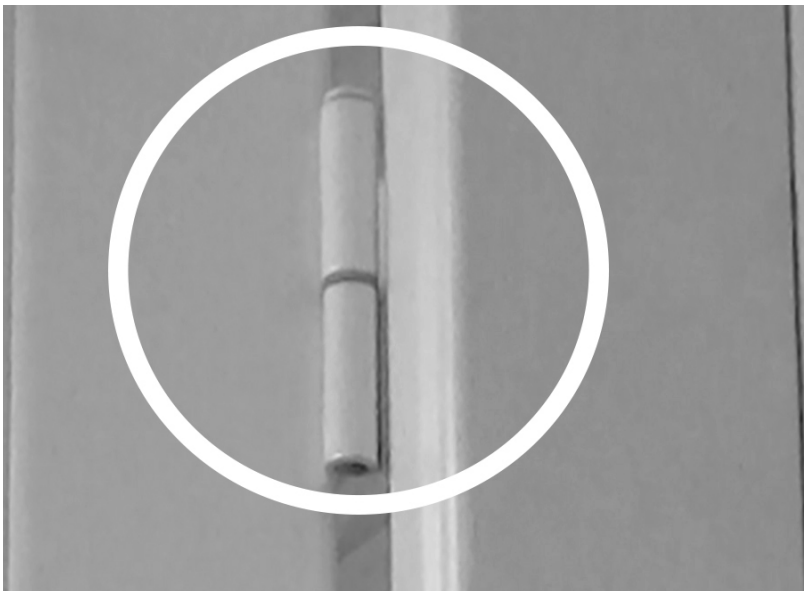

Now check your shutters by opening and closing the louvers by using the tilt-rod in the center of the panel to make sure they operate properly.

Congratulations!

Your new shutter installation is now complete.
Thank You for your purchase.

Shutter Care

Your shutters can be cleaned with a damp cloth, a feather duster or washed with soap and water.

SelectBlinds®